Brazilian Journal of Botany
https://doi.org/10.1007/s40415-020-00671-y

ECOLOGY & BIOGEOGRAPHY - ORIGINAL ARTICLE

Biogeography and Conservation of Gesneriaceae in the *Serra da Mantiqueira*, Southeastern Region of Brazil

Luciana Carvalho Pereira[1] · **Alain Chautems**[2] · **Luiz Menini Neto**[3]

Received: 29 February 2020 / Revised: 31 August 2020 / Accepted: 24 October 2020

Abstract

The present work aimed to study the distribution and richness of Gesneriaceae in the *Serra da Mantiqueira* (SM), located in Southeastern Region of Brazil, as well as to evaluate the conservation degree of endemic species and possible areas of endemism of this *Serra*. The analyzed data were obtained from the literature, as well as from eight herbariums with representative collections of the SM, from field expeditions and an online database, and then marked on a map which was divided into 0.5° × 0.5° grid squares. Richness grid similarity analyzes were performed for the 55 species found, while a parsimony analysis of endemism and the conservation status evaluation were only performed with the 15 endemic species of Gesneriaceae registered for the SM. The highest richness was found for Northern *Mantiqueira* and the similarity between the squares confirmed the two SM sectors and the existence of a relationship between the interior of the ES and the *Zona da Mata* of MG. The 15 endemic species of the SM should be considered threatened to some degree due to restricted distribution, reduced populations and/or anthropogenic impact in their occurrence habitats. Given this richness, there is an imminent need for conservation policies which truly guarantee effective protection of the SM, as it represents a relevant refuge for species in general.

Keywords Atlantic forest · Endemic species · Geographic distribution · Threatened species

1 Introduction

Mountains are formed due to distinct tectonic processes and represent refuges and corridors of high plant diversity if compared with the contiguous lowlands and can be found in different floristic regions of the globe (Körner 1999). They can act as effective geographical barriers for distributing species, resulting in high richness, favoring the occurrence of several species with restricted distribution to mountainous environments, and associated with abiotic and biotic conditions which provide suitable places for the speciation (Chaverri-Polini 1998; Safford 1999). Several mountainous areas of Brazil are relevant for species conservation, although there is a deficit in the knowledge about these environments (Ab'Saber 1989; Martinelli 2007; Rapini et al. 2009; Meireles et al. 2014).

The *Serra da Mantiqueira* (SM) is part of the Brazilian Atlantic Forest and has the highest elevations in the Eastern part of the South American continent. This chain originated from complex geomorphological, climatic, biological, and ecological events. Each portion of the SM presents particularities related to its geomorphological history and its biodiversity (Moreira and Camelier 1977; Rizzini 1997).

According to Machado-Filho et al. (1983), the SM can be divided into two portions, Northern and Southern, although its geographical delimitation has been widely debated by several authors since the beginning of the twentieth-century (Mello and Mello 1909; Várzea 1942; Hueck 1972; Machado-Filho et al. 1983; CETEC 1983; RADAM BRASIL 1983; IBGE 1988; Colabardini 2003; Almeida et al. 2004; Lima 2008; Garcia Júnior 2011; Pelissari and Romaniuc Neto 2013; Meireles et al. 2014; Gonzaga et al. 2019).

✉ Luciana Carvalho Pereira
lucianacpereira.bio@gmail.com

[1] Programa de Pós-Graduação em Ecologia da Universidade Federal de Juiz de Fora, Instituto de Ciências Biológicas, Rua José Lourenço Kelmer, s/n, São Pedro, Juiz de Fora, MG 36036-900, Brazil

[2] Jardin Botaniques de La Ville de Genève, Chemin de l'Impératrice 1, 1292 Pregny-Chambésy, Switzerland

[3] Departamento de Botânica da, Universidade Federal de Juiz de Fora, Instituto de Ciências Biológicas, Rua José Lourenço Kelmer, s/n, Juiz de Fora, Minas Gerais 36036-900, Brazil

Published online: 11 November 2020

Despite this divergence regarding its delimitation, these works often emphasize the high richness found in the SM, reinforcing the need for studies in this region.

In this context, some punctual studies about Gesneriaceae in the SM have been published (Leoni et al. 2004, 2005; Barros et al. 2010; Blaser et al. 2011, 2012; Pereira et al. 2013; Rossini et al. 2017), although no broad evaluation has been performed to date. Throughout the decades, the family received more attention in morphological, taxonomical, and phylogenetic studies, however little attention was given to biogeographical studies.

Gesneriaceae present pantropical distribution with high representativity in the Neotropical Region (Chautems and Matsuoka 2003; Möller 2009; Weber 2004; Weber et al. 2013). Brazil is a secondary center of diversity, with 28 genera and approximately 225 species (Ferreira et al. 2016; BFG 2018; Chautems et al. 2019). The family is represented by herbs, shrubs ou subshrubs, particularly rich in medium elevations in the forests and rock outcrops, growing as terricolous, rupicolous or epiphytic (Chautems and Matsuoka 2003; Weber 2004; Weber et al. 2013).

In view of the above, the present study has the aim to evaluate the geographical distribution patterns of Gesneriaceae using a broad delimitation of the *Serra da Mantiqueira* and seeks to answer the following questions: (1) How is the richness of Gesneriaceae distributed in the SM? (2) Are the species threatened with extinction in regional and global scales, mainly those endemic to the SM, well represented in the study area? (3) Do the floristic relationships of Gesneriaceae corroborate the existence of two portions of the SM (Northern and Southern)? (4) Are there areas of endemism for Gesneriaceae in the SM?

2 Material and methods

Study area – The *Serra da Mantiqueira* occupies a large extension of the Southeastern Region of Brazil along the border of the states of *Espírito Santo* (ES), *Minas Gerais* (MG), *Rio de Janeiro* (RJ), and *São Paulo* (SP) (Hueck 1972; Meirelles 1991; Mendes Júnior et al. 1991).

In view of the complexity and divergence in the delimitation of *Serra da Mantiqueira* found in the literature, we chose to adopt the indications of Várzea (1942), Machado-Filho et al. (1983), CETEC (1983), RADAM BRASIL (1983), and IBGE (1988) for the North–South limit. Regarding the East–West limits, we consider all the areas along the North–South line, taking into account the indications in several studies performed in the SM (Colabardini 2003; Lima 2008; Garcia Júnior, 2011; Pelissari and Romaniuc Neto 2013; Silva 2016; Gonzaga et al. 2019), and using the cartographic base presented by Weber (2004). This area includes a total of 399 municipalities. The shapefile of the delimitation of the SM was created in QGIS 2.18 free access software (https://www.qgis.org/pt_BR/site/forusers/download.html) and is presented in Fig. 1.

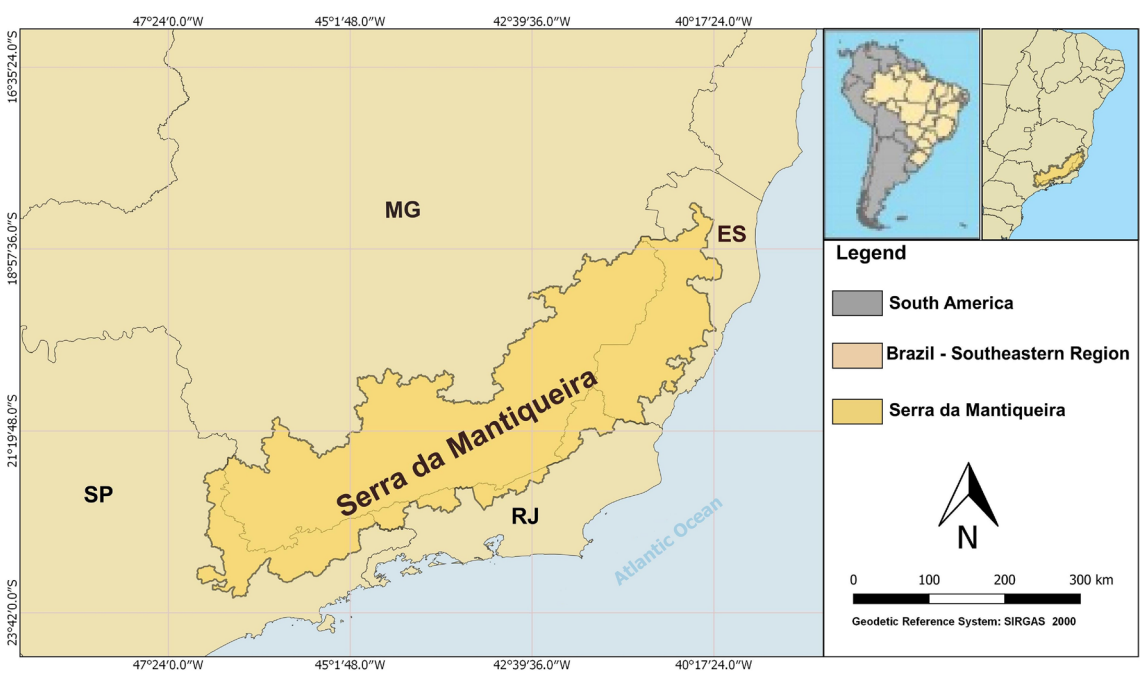

Fig. 1 Delimitation of the Serra da Mantiqueira in the Southeastern Region of Brazil

Data collection – Data on 55 species and eight genera of Gesneriaceae occurring in the SM were obtained in the SpeciesLink (https://www.splink.org.br/) and Reflora (https://reflora.jbrj.gov.br/) databases, and in the personal material of the second author, in addition to observation and collection in the field, as well as specialized literature. The collections of some representative herbaria with specimens of the SM were also examined, including AFR, BHCB, CESJ, ESAL, SP, SPF, R, and VIC (acronyms according to Thiers 2018).

We only considered specimens identified to the species level by specialists in the family and excluded those records of cultivated plants, doubtful locations, and duplicated records. Thus, the final database used in the analyses has 2549 records. Some specimens without geographical coordinates were georeferenced using the information on the sheet label and the GeoLoc tool of the SpeciesLink available at the *Centro de Referência em Informação Ambiental* (CRIA) site (https://splink.cria.org.br/geoloc?criaLANG=pt).

Spatial analyses – The study area was divided into grid squares of 0.5°×0.5° which were used as the units for the analyses on a shapefile of the *Serra da Mantiqueira* (Pereira 2019), according to the aforementioned delimitation. This delimitation and the evaluation of richness were performed in QGIS 2.18 software.

We used the GeoCAT tool (geospatial conservation assessment tool, disponível em https://geocat.kew.org/ to calculate the extension of occurrence (EOO) and area of occupation (AOO) according to the criteria established by the *International Union for Conservation of Nature*—IUCN (IUCN 2013) in order to evaluate the conservation status of the Gesneriaceae species endemic to the SM. A comparison of the status found was also carried out with the Red Book of Brazilian Flora (Martinelli and Moraes 2013) and with the official lists of threatened species of each state which integrates the SM: *Minas Gerais* (COPAM-MG 2008), *São Paulo* (SMA-SP 2016), *Rio de Janeiro* (Martinelli et al. 2018), and *Espírito Santo* (INMA-ES 2019).

The similarity analysis aimed to evaluate the floristic relationships between the regions of the SM, and mainly if the existence of Northern and Southern portions is corroborated by Gesneriaceae flora. The presence (1) and absence (0) matrix was constructed using the grid squares of 0.5°×0.5° and the gathered data. This matrix was used in the cluster analysis through the UPGMA (unweighted pair-group method using arithmetic averages) algorithm and the Jaccard similarity index performed in Biodiverse v. 3.0 free access software (Laffan et al. 2010).

The species records were superimposed over the shapefile of state and federal conservation units of the SM. Thus, we correlated the occurrence of 55 native species found in the SM and their potential for conservation. This was performed in the QGIS 2.18 software.

The parsimony analysis of endemicity (PAE) was performed using a matrix of the presence (1) and absence (0) constructed in Nexus Data Editor 0.5.0 free access software (Page 2001) only using endemic species to the SM and the aforementioned grid squares of 0.5°×0.5°, following (Morrone 1994). A hypothetical ancestral area (with 0 in all taxa) was added as an outgroup for rooting the cladogram. The cladograms were constructed through NONA free access software (Goloboff 1993) with a WinClada 0.9.9 interface (Nixon 1999), searching for the most parsimonious species. The PAE was used to detect areas or micro areas of endemism in the SM, which, respectively, corresponds to a group of grid squares which share two or more exclusive species (geographical synapomorphies) (Morrone 1994) or only one grid square with at least two exclusive species (geographical autapomorphies) (García-Navarrete and Morrone 2018).

3 Results

The *Serra da Mantiqueira* has its largest extension in the state of *Minas Gerais* (MG), and it is the only state comprising both portions, Northern and Southern, totaling 290 municipalities. The SM presents 44 species in this state, of which seven are endemic (*Besleria brevicalyx* G.E.Ferreira and Chautems, *B. meridionalis* C.V.Morton, *Sinningia striata* (Fritsch) Chautems, *Vanhouttea bruegeri* Chautems, *V. hilariana* Chautems, *V. leonii* Chautems and *V. pendula* Chautems), being restricted to small areas of the SM in *Minas Gerais*. The state of *São Paulo* (SP) presents the second largest extension of the SM, only in the Southern portion, comprising 52 municipalities. We recorded 12 species in this state and none are endemic. The state of *Espírito Santo* (ES) presents the third largest area of the SM, with 39 municipalities, only in the Northern portion. We recorded 38 species here, of which eigth are endemic to the SM (*Besleria discrete* G.E.Ferreira, *Codonanthe gibbosa* Rossini and Chautems, *N. punctatus* Chautems, *S. flammea* Chautems and Rossini, *S. helioana* Chautems and Rossini, *S. hoehnei* Chautems, A.P. Fontana and Rossini, *S. kautskyi* Chautems and *S. valsuganensis* Chautems). The state of *Rio de Janeiro* (RJ) has 18 municipalities inside the SM, only in the Southern portion. We recorded 15 species here and none are endemic to the SM. There is a high concentration of collections in *Resende* and *Itatiaia* in this state (due to the conservation units of the *Parque Estadual da Pedra Selada* and the *Parque Nacional do Itatiaia*).

According to Fig. 2, the richest region is represented by grid square 7 (27 species), which the ReBio (biological reserve) *Augusto Ruschi* and the EE (ecological station)

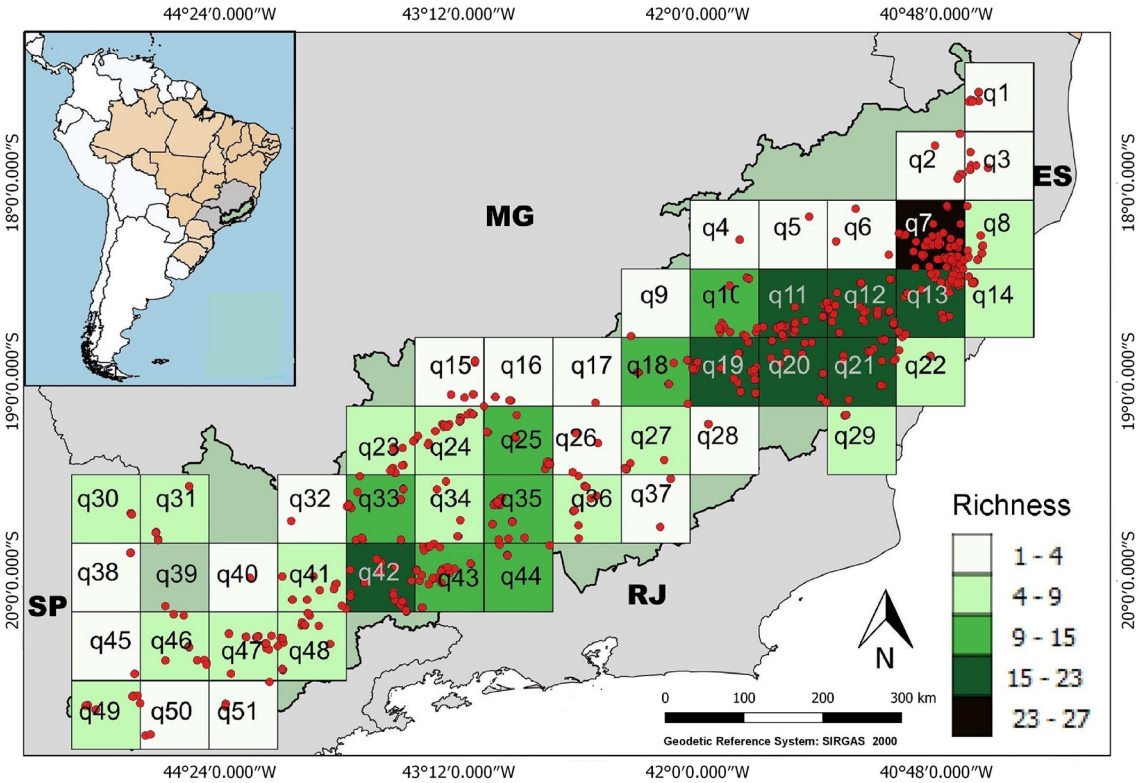

Fig. 2 Gesneriaceae richness in the Serra da Mantiqueira using grid squares of 0.5° × 0.5°

Santa Lúcia conservation units, both in the municipality of *Santa Teresa* (ES). In sequence, the richest grid squares are 11, 12, 13, 19, 20, 21, and 42 (15–23 spp.) and represent the state park (*Parque Estadual*—PE) areas of *Pedra Azul* (ES), *Forno Grande* (ES), *Cachoeira da Fumaça* (ES), *Serra do Brigadeiro* (MG) and national parks (*Parque Nacional*—PN) of *Caparaó* (ES/MG) and *Itatiaia* (MG/RJ). It is also worth mentioning the grid squares 10, 18 25, 33, 35, 43, and 44 (9–15 spp.). The first two represent regions near PN *do Caparaó* and PE *da Serra do Brigadeiro*, and the others correspond to the areas of PE *do Ibitipoca* (MG), PE *da Serra Negra da Mantiqueira* (MG), and PE *da Serra do Papagaio* (MG).

Three geographical distribution patterns of Gesneriaceae were found for the SM: (I) broadly distributed taxa, considering those with distribution in both the Northern and Southern portions of the SM, such as *Nematanthus crassifolius* (Schott) Wiehler, *N. fornix* (Vell.) Chautems, *N. lanceolatus* (Poir.) Chautems, *Paliavana prasinata* (Ker Gawler) Bentham, *Sinningia allagophylla* (Mart.) Wiehler, *S. cooperi* (Paxton) Wiehler, *S. douglasii* (Lindl.) Chautems, *S. gigantifolia* Chautems, *Sinningia magnifica* (Otto and A.Dietr.) Wiehler, and *S. sceptrum* (Mart.) Wiehler; (II) taxa restricted to the Northern portion of the SM, such as *Besleria brevicalyx, B. discreta, B. meridionalis, Codonanthe gibbosa, Nematanthus punctatus, Sinningia aghensis, S. carangolensis* Chautems, *S. flammea, S. helioana, S. hoehnei, S. kautskyi, S. valsuganensis, Vanhouttea brueggeri, V. leonii*, and *V. pendula*; (III) taxon restricted to the Southern portion of the SM, such as *Sinningia striata*, endemic to the *Caldas* region.

The similarity analysis resulted in a dendrogram with the cophenetic coefficient of 0.85, representing a good fit between the presence and absence matrix and generated a tree based on the grid squares (Fig. 3). This analysis resulted in five groups, of which two deserve attention; the first is represented by the red cluster, grouping the majority of grid squares of the Southern *Mantiqueira*, and the second is represented by the yellow cluster, grouping the majority of grid squares of Northern *Mantiqueira*. The other branches (blue and green) are mainly composed of neighboring areas of both portions.

There were 15 species among the 55 native species occurring in the SM which are endemic to this mountain chain: *Besleria brevicalyx* and *B. meridionalis* found in the municipality of *Descoberto* (MG) and its surroundings; *Codonanthe gibbosa, S. helioana*, and *S. valsuganensis* occurring in the region of *Santa Teresa* (ES) and its surroundings; *Besleria discreta* and *N. punctatus* are found in the region of *Alfredo Chaves* and *Cachoeiro do Itapemirim* (ES); *S. flammea, S. hoehnei,* and *S. kautskyi* occur in the mountainous region of ES like Colatina and Domingos Martins; *S. striata*

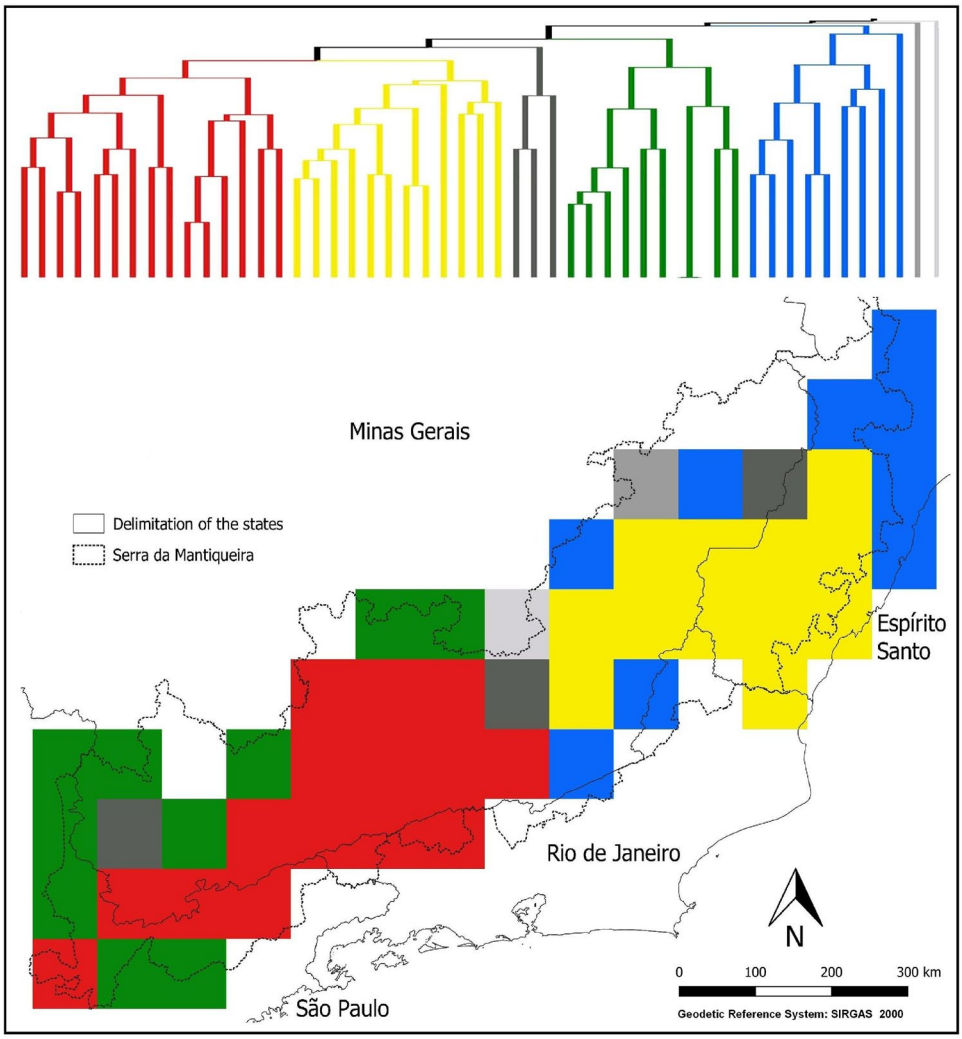

Fig. 3 Dendrogram of similarity between the areas of the Serra da Mantiqueira obtained with the UPGMA algorithm, the Jaccard index, and using grid squares of 0.5°×0.5°. Cophenetic coefficient = 0.85

is found in the region of *Serra da Pedra Branca* in *Caldas* (MG); *Vanhouttea brueggeri* and *V. hilariana* are found in the region and inside the conservation units of the PE *do Ibitipoca* and PE *da Serra Negra da Mantiqueira* (MG); and *V. leonii* and *V. pendula* found in the region and inside the PN *do Caparaó* (ES/MG) and PE *da Serra do Brigadeiro* (MG).

The PAE resulted in 648 parsimonious trees ($L = 47$, Ci = 36, Ri = 28), and we obtained a tree after performing a strict consensus analysis, which is shown in Fig. 4. We did find only one microarea of endemism for the Gesneriaceae of SM, represented by grid square q9 and the presence of *Sinningia flamea* and *S. helioana*, but others also must be highlighted, as the set of grid squares 11, 12, 19, 20, and 21 due to the presence of *Vanhouttea leonii*, grid squares 32 and 42 that share the presence of *Sinningia striata*, grid square 14 is restricted *Sinningia kautsky* and grid square 23, with the presence of *Codonanthe gibbosa*.

The EOO and AOO evaluations of the 15 endemic species to the SM indicate that all must be considered threatened to some degree: *Besleria meridionalis*, *Nematanthus punctatus*, *Sinningia flammea*, *S. helioana, S. hoehnei*, and *S. kautskyi* are in the critically endangered (CR) category; *Codonanthe gibbosa*, *Sinningia striata*, *S. valsuganensis*, *Vanhouttea brueggeri*, *V. leonii*, and *V. pendula* are classified as endangered (EN), and *Besleria brevicalyx*, *B. discrete* and *Vanhouttea hilariana* are considered vulnerable (VU). The superimposition of the distribution over the shapefiles of state and federal conservation units of the SM showed that six species are not protected in any of them, namely *Besleria discreta, Nematanthus punctatus, Sinningia flammea, S. helioana, S. hoehnea* and *S. kautsky.*

4 Discussion

The Brazilian Atlantic Forest is considered a secondary center of diversity for Gesneriaceae (Weber et al. 2013), presenting 142 known species (Ferreira et al. 2016; BFG 2018; Chautems et al. 2019), of which 55 species were

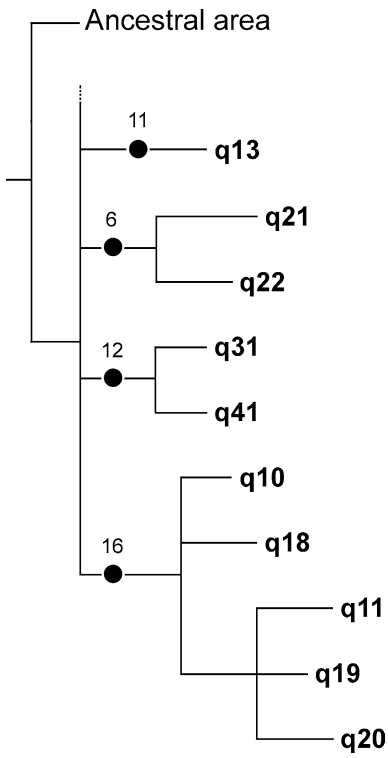

Fig. 4 Tree resulting from the strict consensus of 648 parsimonious trees obtained from the parsimony analysis of endemicity with the Gesneriaceae species endemic to the Serra da Mantiqueira. Only the branches with exclusive species to the grid squares are shown. The numbers above the black circles represent the endemic species, according to the text

recorded in the SM, representing 40% richness of the family in this phytogeographical domain. The expressive number of Gesneriaceae found in the SM shows the diversity of the flora, in addition to the number of the recorded genera (eight), as 28 genera are found in Brazilian flora (Weber et al. 2013). Such data corroborate studies regarding other plant families in this area, which highlight the high richness of this environment (Almeida et al. 2004; Lima 2008; Pelissari and Romaniuc Neto 2013; Gonzaga et al. 2019).

According to BFG (2018), *Rio de Janeiro* presents the greatest Gesneriaceae richness (58 spp.) among the states in the Southeastern Region of Brazil, followed by *São Paulo* (54 spp.), *Minas Gerais* (52 spp.), and *Espírito Santo* (41 spp.). These values are in contrast with results found for the *Serra da Mantiqueira*, where the richest state is *Minas Gerais* (44 spp.), probably due to having the largest area in the SM, followed by *Espírito Santo* (38 spp.) where 1/3 of its territory is occupied by the SM, then *Rio de Janeiro* (15 spp.) and *São Paulo* (12 spp.) (RADAM BRASIL 1983). The sampling effort in the last state is potentially low due to the areas of ecological tension with intense anthropic pressure, or even because they have steep areas which are difficult to access, mainly in localities inside the *Serra da Mantiqueira* (Takiya 2002; Sousa 2007).

There is a sampling bias for Gesneriaceae in the SM inside and near conservation units, often called the "museum effect" in the literature. This theory states that efficiency, logistics, and convenience make researchers concentrate their sampling effort near research centers, as well as localities with known high species richness recorded in previous studies, like in the mountainous areas (Ponder et al. 2001; Sastre and Lobo 2009). In addition, this theory explains the high number of projects performed by universities and research institutions which are often located near more conserved areas. Is remarkable for SM that collectors deposited material in renowned institutions as an incentive to study botanical families. The floristic studies performed by the *Museu de Biologia Professor Mello Leitão*, currently, part of the *Instituto Nacional da Mata Atlântica* in Santa Teresa (ES) (*e.g.*, Rossini et al. 2017), as well as by the *Universidade Federal* (*UF*) *de Juiz de Fora* (MG) (Pereira et al. 2013), *UF de Viçosa* (MG) (Rossini 2010), *Jardim Botânico do Rio de Janeiro* (Gonzaga et al. 2019), *Museu Nacional do Rio de Janeiro* (RJ) (Alves and Kolbek 2009), *Universidade de São Paulo* (SP) the *Instituto de Botânica* (SP) (Pelissari and Romaniuc Neto 2013), and the *Universidade Estadual de Campinas* (SP) (Meireles 2009), among several other concluded studies in the SM. These institutions are important contributors to the knowledge of the richness and diversity found in the SM and the Brazilian Atlantic Forest.

The similarity analysis reinforces the existence of Northern and Southern portions of the SM, corroborating the classical delimitation by Machado-Filho et al. (1983). However, although both portions present some peculiarities regarding their Gesneriaceae flora, we must consider the SM as a single chain, as both portions share approximately 30% of the recorded species. The yellow and red clusters in the dendrogram, respectively, represent the colors of the Northern and Southern portions of the SM, composed by similar habitats like vegetation mosaics of forests and fields (*campos rupestres* and *campos de altitude*). In general, the other clusters (blue and green) grouped non-contiguous areas, probably due to the low richness and sharing of widely distributed species such as *Paliavana prasinata*, *Sinningia allagophylla*, and *S. magnifica*, and are peripheral areas of the SM, not necessarily representing a relationship between them.

According to several delimitations found in the literature for the SM (IBGE 1983; Machado-Filho et al. 1983; RADAM BRASIL 1983), and regarding the delimitation proposed in the present study, the results suggest that the mountain region of the state of *Espírito Santo* must be considered as part of the SM from the floristic point of view, in addition to the geological standpoint. This region is grouped together with other areas of the Northern SM located in the *Zona da Mata* of *Minas Gerais*, but also shares some species

with the Southern SM, reinforcing the delimitation used in this study.

All 15 endemic species must be considered threatened with extinction in one of the three categories of the IUCN (2013) due to the restricted distribution range. In addition, their populations are often small and the environments are under strong anthropic pressure (for instance, the granitic inselbergs highly exploited by mining companies) (Barthlott et al. 1993; Porembski and Barthlott 2000). Even those species inside the conservation units do not have guaranteed protection, since the units often are underfunded and do not have sufficient guards for supervision and are also under the constant pressure of external threats, needing more concrete policies for maintaining the diversity (Brito 2000; Pádua 2002).

There are ten species among the 55 which are not protected in any conservation unit of the SM: *Besleria discreta*, *Codonanthe serrulata* Chautems, *Nematanthus punctatus*, *Sinningia bragae* Chautems, M. Peixoto & Rossini, *S. elatior* (Kunth) Chautems, *S. flammea, S. helioana*, *S. hoehnei*, *S. kautsky,* and *S. warmingii* (Hiem) Chautems. Among these ten species, it is worth mentioning that five of them are among the 15 with endemism for SM, they are: *Besleria discreta, S. flammea, S. helioana, S. hoehnei* and *S. kautsky*, reinforcing even more the need to raise new UCs to guarantee the protection of these species of distribution so restricted in SM and that are somehow unprotected. We also highlight that *Nematanthus punctatus* present only two records in natural environment, around the municipalities of Cachoeiro do Itapemirim and Alfredo Chaves (ES), *Sinningia hoehnei* have only one record alongside the road between the municipalities of Castelo and Muniz Freira (ES), and *S. helioana* have three records to date, at the base of Pedra da Onça, in the municipality of Santa Teresa (ES). These rare species are potentially more threatened because their populations are vulnerable to several types of anthropogenic disturbances and because the environment is currently being transformed without proper attendance and respect to the current environmental legislation, especially the Law of Protection of the Atlantic Forest domain, which aims at sustainable development and, the adoption of measures to protect its biodiversity. Despite all threats, this family still presents high richness in the SM and is a good model for several types of studies (Brandi and Barlette 2001; Oliva Júnior 2012).

It is well known that large extensions of the SM were transformed into degraded environments. However, the indication and selection of areas for conservation of biodiversity is a complex activity that involves the treatment and use of the available information for making the decision. The results presented show that some areas of the SM deserve attention and could be considered a priority for the conservation of Gesneriaceae, due to the presence of endemic species, often occurring in private areas and have small populations highly threatened: the regions of municipalities of Cachoeiro do Itapemirim, Alfredo Chaves, Colatina and *Pedra da Onça* (in Santa Teresa) (ES), and the region of *Serra do Relógio* in the municipality of Descoberto (MG),

It is important to draw attention to two endemic species of the SM that were not evaluated in the official lists (COPAM-MG 2008; Martinelli and Moraes 2013; INMA-ES 2019). For example, *Besleria brevicalyx* (MG) and *B. discrete* (ES), were not yet evaluated, although the results show that they must be considered threatened with extinction in some category of the IUCN (2013), mainly due to small populations and restricted distribution range. Thus, we suggest the inclusion of these species in the future evaluation of the red lists.

The parsimony analysis of endemicity indicated one microarea of endemism for Gesneriaceae in the SM (according to the definition of Morrone (1994) and García-Navarrete and Morrone (2018)), represented by the altitude region of ES (grid square q9) and the occurrence of the species *Sinningia flammea* and *S. helioana*. However, some other areas are also important, once they present restricted species: q14 with *Sinningia kautskyi*; q23 with *Vanhouttea hilariana*; q32 and q42 with *Sinningia striata* and the grid squares q11, q12, q19, q20, and q21, with *Vanhouttea leonii*). Despite the existence of only one microarea of endemism for Gesneriaceae in the SM, the 15 endemic species confirmed the mountainous chain as a region of high endemism, corroborating the results obtained for birds (Silva et al. 2004), moths (Ferro and Melo 2011), angiosperms (Werneck et al. 2011), anuran (Vasconcelos et al. 2014) and epiphytic angiosperms (Menini Neto et al. 2016).

The Gesneriaceae present great richness in Brazil and have a remarkable presence in the Atlantic Forest. From the evolutionary standpoint, it is known that Gesneriaceae probably have originated in the Late Cretaceous at South America, specifically between the temperate Andes and the Amazon Forest (Perret et al. 2013). There are indications of biotic shifts between the Brazilian Atlantic Forest and the Andes or the Guayana Highlands, based on the distribution of species intimately related (Safford 1999; Prado 2000). Several taxons of this family present restricted distribution to well-conserved forests, rock outcrops, *campos rupestres*, and *campos de altitude*. However, according to Weber (2004), there is not a general habitat pattern for the family, once the species occupy a wide variety of environments, and the moisture is the only environmental factor recorded in the literature as a limiting one. Moreover, some genera as Codonanthe and Nematanthus are endemic to the Brazilian Atlantic Forest, and according to Perret et al. (2006), the genera *Sinningia* and *Vanhouttea* have this phytogeographic domain as their probable ancestral area. These plants present a great diversity of floral morphology which reflects on the dynamic evolution between plants and pollinators. However,

they are suffering from constant threats from deforestation, exploitation of rocks, and predatory collections which are putting rare species in danger of extinction. Despite all the threats, this family revealed high richness for the SM, thus providing a good model for several types of studies.

In this context, the SM comprises several phytophysiognomies, showing the high biological importance of these environments. The SM is very vast, but also very fragmented due to anthropic and natural processes; however, several studies are revealing the high degree of species richness along with its range. This chain is an important refuge of the Atlantic Forest since it comprises a great richness of plants and animals, with several being endemic (Rivers et al. 2011; Le Saout et al. 2013).

It is worth mentioning that despite the large number of studies on biodiversity, the geographic distribution of the species still presents huge knowledge gaps for the vast majority of taxa, which can be called "Wallacean Deficiency". According to Whittaker et al (2005), this deficiency is dependent on the scale, both in evolutionary and ecological dimensions, and it is important because most practical decisions on how to conserve biodiversity are made at regional and even local scales. In addition, the effects of this deficiency have strong impacts on the systematic planning of conservation, which can be even more serious in regions that have been poorly studied and have high biodiversity and varying degrees of human occupation, as is the case of *Serra da Mantiqueira.*

To this end, the present study presents new occurrence data for some taxa. In this sense, the need for survey and distribution works regarding the flora is noteworthy, since we do not have a thorough knowledge of several regions of the Atlantic Forest and the *Serra da Mantiqueira*. The importance of these studies is emphasized as an enhancement of anthropic threats are fragmenting the rich areas of Brazil.

Acknowledgements The authors wish to thank the *Pós-graduação em Ecologia da Universidade Federal de Juiz de Fora* program for support in the field work; to the *Leopoldo Krieger* herbarium (CESJ), the *Instituto Estadual de Florestas* and the *Instituto Chico Mendes de Conservação da Biodiversidade* for the logistic support; to Dra. Fátima Salimena and all collaborators who contributed to this work. This study was financed in part by the *Coordenação de Aperfeiçoamento e Pessoal de Nível Superior—Brasil* (CAPES)—Finance Code 001.

Author contributions Material preparation, data collection, analysis were performed and drafted the paper by LCP; AC performed data collection and assisted in the analysis and writing of the text; LMN designed, supervised and assisted in carrying out all the work. All authors read the final manuscript and approved the submission.

References

Ab'Saber NA (1989) Introdução. In: Martinelli G, Bandeira J (eds) Campos de Altitude. Index, Rio de Janeiro, pp 15–29

Almeida AM, Prado PI, Lewinsohn TM (2004) Geographical distribution of Eupatorieae (Asteraceae) in southeastern and South Brazilian mountain ranges. Plant Ecol 174:163–181

Alves RJV, Kolbek J (2009) Summit vascular flora of Serra de São José, Minas Gerais, Brazil. Check List 5:35–73

Barthlott W, Gröger A, Porembski S (1993) Some remarks on the vegetation of tropical inselbergs: diversity and ecological differentiation. Biogeographica 69:105–124

Barros MJG, Mansano VF, Chautems A (2010) Comparações florísticas e taxonomia da família Gesneriaceae no Parque Nacional do Itatiaia, Brasil. Hoehnea 37:131–145

Brandi AP, Barlette VE (2001) Degradação ambiental: uma abordagem por entropia. Rev Discipl Sci 1:161–170

Brito MCW (2000) Unidades de Conservação: intenções e resultados. FAPESP/Annablume, São Paulo

BFG—The Brazil Flora Group (2018) Brazilian Flora 2020: innovation and collaboration to meet target 1 of the global strategy for plant conservation (GSPC). Rodriguésia 69:1513–1527

Blaser JG, Eiterer M, Salimena FRG, Chautems A (2011) Gesneriaceae do Parque Estadual do Ibitipoca, Minas Gerais, Brasil. Boll de Bot da Univ de São Paulo 29:1–12

Blaser J, Salimena FRG, Chautems A (2012) Gesneriaceae na Serra Negra, Minas Gerais, Brasil. Rodriguésia 63:705–714

CETEC—Fundação Centro Tecnológico de Minas Gerais (1983) Diagnóstico ambiental do estado de Minas Gerais. CETEC/Comissão de Política Ambiental, Belo Horizonte

Chautems A, Matsuoka CYK (2003) Gesneriaceae. In: Wanderley MGL, Shepherd GJ, Giulietti AM, Melhem TS (eds) Flora Fanerogâmica do Estado de São Paulo. FAPESP/Rima, São Paulo, pp 75–103

Chautems A, Dutra VF, Fontana AP, Peixoto M, Perret M, Rossini J (2019) Three new species of *Sinningia* (Gesneriaceae) endemic to Espírito Santo, Brazil. Candollea 74:33–42

Chaverri-Polini A (1998) Mountains, biodiversity and conservation. Unasylva 195:22–33

COPAM—Conselho Estadual de Política Ambiental (2008) Lista das Espécies Ameaçadas de Extinção da Flora do Estado de Minas Gerais. Belo Horizonte. https://www.siam.mg.gov.br/sla/download.pdf?idNorma=9450. Accessed 3 Nov 2019

Colabardini MFT (2003) São João da Boa Vista: a paisagem geográfica da escarpa da Mantiqueira. Dissertação. Universidade Estadual Paulista, São Paulo, Rio Claro

Ferro VG, Melo AS (2011) Diversity of tiger moths in a Neotropical hotspot: determinants of species composition and identification of biogeographic units. J Insect Conserv 15:643–651. https://doi.org/10.1007/s10841-010-9363-6

Garcia Júnior G (2011) Caminhos da Mantiqueira. Empresa das Artes, São Paulo

García-Navarrete PG, Morrone JJ (2018) Testing the biogeographical regionalization of the Mexican Transition Zone based on the distribution of Curculionidae (Insecta: Coleoptera). Zootaxa 4530:1–99

Gonzaga DR, Peixoto AL, Menini Neto L (2019) Patterns of richness and distribution of Cactaceae in the Serra da Mantiqueira, Southeast Brazil, and implications for its conservation. Acta Bot Bras 31:97–105. https://doi.org/10.1590/0102-33062018abb0178

Hueck K (1972) As florestas da América do Sul. Ecologia, composição e importância econômica. Editora da Universidade de Brasília & Editora Polígono, São Paulo.

IUCN—International Union for Conservation of Nature (2013) Red List of Threatened Species. https://portals.iucn.org/library/sites/library/files/documents/IUCN-2018-1. Accessed 20 July 2018

Körner C (1999) Alpine plant life: functional plant ecology of high mountain ecosystems. Springer, Berlin

Laffan SW, Lubarsky E, Rosauer DF (2010) Biodiverse, a tool for the spatial analysis of biological and related diversity (Version 1.0). Ecography 33:643–647

Le Saout S, Hoffmann M, Shi Y, Hughes A, Bernard C, Brooks TM, Bertzky B, Butchart SHM, Stuart SN, Badman T, Rodrigues AS (2013) Protected areas and effective biodiversity conservation. Science 342:803–805

Leoni LS, Rocha MJR, Chautems A (2004) Flora Fanerogâmica do Parque Nacional do Caparaó: Gesneriaceae. Pabstia 3:1–11

Leoni LS, Rocha MJR, Chautems A (2005) Flora Fanerogâmica do Parque Estadual da Serra do Brigadeiro: Gesneriaceae. Pabstia 3:1–12

Lima TT (2008) Bromeliaceae da Serra da Mantiqueira: distribuição geográfica e conservação. Dissertação. Instituto de Botânica da Secretaria de Estado do Meio Ambiente de São Paulo, São Paulo

Machado-Filho L, Ribeiro MW, Gonzalez SR (1983) Geologia. In: Machado-Filho L (ed) Projeto RADAM BRASIL. Folhas SF: 23/24, v.32. Rio de Janeiro/Vitória, Rio de Janeiro, pp 1–779

Martinelli G (2007) Mountain biodiversity in Brazil. Rev Bras de Bot 30:587–597

Martinelli G, Moraes MA (2013) Livro Vermelho da Flora do Brasil. 1 ed. Instituto de Pesquisa do Jardim Botânico, Rio de Janeiro. https://cncflora.jbrj.gov.br. Acessed 17 Aug 2018

Martinelli G, Martins E, Moraes M (2018) Livro Vermelho da Flora Endêmica do Estado do Rio de Janeiro. Instituto de Pesquisas Jardim Botânico do Rio de Janeiro: Andrea Jakobsson, Rio de Janeiro. https://www.inea.rj.gov.br/wp-content/uploads/2019/09/livro-vermelho-endemicas-rj.pdf. Acessed 18 Sep 2018.

Meirelles S (1991) Mantiqueira, a riqueza nativa da Mata Atlântica. Ecol e Desenvolv 9:20–27

Meireles LD (2009) Estudos Florísticos, Fitossociológicos e Fitogeográficos em Formações Vegetacionais Altimontanas na Serra da Mantiqueira Meridional, Sudeste do Brasil. Tese. Universidade Estadual de Campinas, São Paulo

Meireles LD, Kinoshita LS, Shepherd JG (2014) Composição florística da vegetação altimontana do distrito de Monte Verde (Camanducaia, MG), Serra da Mantiqueira Meridional, Sudeste do Brasil. Rodriguésia 65:831–859

Mello H, Mello FH (1909) Atlas do Brazil. F. Briguiet & Cia, Editores, Rio de Janeiro

Menini Neto L, Furtado SG, Zappi DC, Oliveira Filho AT, Forzza RC (2016) Biogeography of epiphytic Angiosperms in the Brazilian Atlantic forest, a world biodiversity hotspot. Braz J Bot 39:261–273

Mendes Júnior LO, Antoniazzi M, Viera MCW (1991) Relatório Mantiqueira. Frente em defesa da Mantiqueira. FEDAPAM, São Paulo

Möller M (2009) Hollingsworth. In: Barfuss MHJ, Wang YZ, Kiehn M, Weber AA, (eds) Preliminar phylogeny of the "didymocarpoid gesneriaceae" based on three molecular data sets: incongruence whit available tribal classifications. Am J of Bot 96: 989–1010.

Moreira AAN, Camelier C (1977) Relevo. In: IBGE. Geografia do Brasil: região sudeste, Rio de Janeiro, pp 1–50

Morrone JJ (1994) On the identification of areas of endemism. Syst Biol 43:438–441

Nixon KC (1999) WinClada (Beta). Version 0.9.9. Published by the author, Ithaca, New York. [Software]

Oliva Júnior EF (2012) Os impactos ambientais decorrentes da ação antrópica na nascente do Rio Piauí - Riachão do Dantas – SE, vol 7. Rev Eletr da Fac José Augusto Vieira, Sergipe, pp 1–8

Pádua MTJ (2002) Unidades de conservação: muito mais do que atos de criação e planos de manejo. In: Milano MS (org.) Unidades de Conservação: Atualidades e Tendências. Fundação O Boticário de Proteção à Natureza. Curitiba, pp 7–13

Page RDM (2001) NEXUS data editor for windows. https://taxonomy.zoology.gla.ac.uk/rod/NDE/nde.html#Download. [Software]

Pelissari G, Romaniuc Neto S (2013) *Ficus* L. (Moraceae) da Serra da Mantiqueira. Rodriguésia 64:91–111

Ponder WF, Carter GA, Flemons P, Chapman RR (2001) Evaluation of museum collection data for use in biodiversity assessment. Conserv Biol 15:648–657

Pereira LC, Chautems A, Menini Neto L, Melo RM (2013) Gesneriaceae no Parque Estadual da Serra do Papagaio, Minas Gerais, Brasil. Boll de Bot da Univ de São Paulo 31:1–12

Perret M, Chautems A, Spichiger R (2006) Dipersal-vicariance analyses in the tribe Sinningieae (Gesneriaceae): a clue to understanding biogeographical history of the Brazilian Atlantic forest. Ann Mo Bot Gard 93:340–358

Perret M, Chautems A, Araújo AO, Salamin N (2013) Temporal and spatial origin of Gesneriaceae in the New World inferred from plastid DNA sequences. Bot J Linn Soc 171:61–79

Porembski S, Barthlott W (2000) Granitic and gneissic outcrops (inselbergs) as centers of desiccation-tolerant vascular plants. Plant Ecol 151:19–28

Rapini A, Andrade MJG, Giulietti AM, Queiroz LP, Silva JMC (2009) Introdução: uma flora pouco conhecida e bastante ameaçada. In: Giulietti AM, Rapini A, Andrade MJG (eds) Plantas Raras do Brasil. Conservação Internacional, Belo Horizonte, pp 23–35

RADAM BRASIL (1983) Levantamento dos Recursos Naturais. Folhas SF.23/24 Rio de Janeiro/Vitória: geologia, geomorfologia, pedologia, vegetação e uso potencial da terra. Ministério de Minas e Energia/Secretaria Geral, Rio de Janeiro, pp 1–779

Rivers MC, Taylor L, Brummitt NA, Meagher TR (2011) How many herbarium specimens are needed to detect threatened species? Biol Conserv 144:2541–2547. https://doi.org/10.1016/j.biocon.2011.07.014

Rizzini CT (1997) Tratado de fitogeografia do Brasil: aspectos ecológicos, sociológicos e florísticos. 2 ed. Âmbito Cultural, Rio de Janeiro

Rossini J (2010) Levantamento Florístico das Gesneriaceae do Município de Santa Teresa, Espírito Santo, Brasil. Dissertação. Universidade Federal de Viçosa. Viçosa, Minas Gerais

Rossini J, Fernandes HQB, Chautems A (2017) A família Gesneriaceae na Reserva Biológica Augusto Ruschi, Santa Teresa, ES, Brasil. Boll do Mus de Biol Mello Leitão 39:127–147

Safford HF (1999) Brazilian Páramos I. An introduction to the physical environment and vegetation of the campos de altitude. J Biogeogr 26:693–712

Sastre P, Lobo JM (2009) Taxonomist survey biases and the unveiling of biodiversity patterns. Biol Conserv 142:462–467

Silva JMC, Sousa MC, Castelletti CH (2004) Areas of endemism for passerine birds in the Atlantic Forest, South America. Glob Ecol Biogeogr 13:85–92

Sousa NV (2007) Conservação ambiental na área de tensão ecológica da parte setentrional da bacia do Parnaíba. Dissertation. Universidade Federal do Piauí. Piauí.

Takiya H (2002) Atlas Ambiental do Município de São Paulo. Fase I: Diagnóstico e Bases para a Definição de Políticas Públicas para as Áreas Verdes no Município de São Paulo. FAPESP (Fundação de Amparo à Pesquisa do Estado de São Paulo), São Paulo

Thiers B (2018) Index herbariorum: a global directory of public herbaria and associated staff. New York Botanical Garden's Virtual Herbarium. https://sweetgum.nybg.org/Science/ih/. Accessed 30 Apr 2018

Vasconcelos TS, Prado VHM, Silva FR, Haddad CFB (2014) Biogeographic distribution patterns and their correlates in the diverse frog fauna of the Atlantic forest hotspot. PLoS ONE 9:104–130

Várzea A (1942) Relevo do Brasil. Rev Bras de Geogr 4:97–130

Weber A (2004) Gesneriaceae. In: Kubitzki K (ed) The families and genera of vascular plants. Springer, Berlin, pp 426–437

Weber A, Clark JL, Möller M (2013) A New Formal Classification of Gesneriaceae. Selbyana 31:68–94

Werneck FP, Costa GC, Colli GR, Prado DE, Sites JW Jr (2011) Revisiting the historical distribution of seasonally dry tropical forests: new insights based on palaeodistribution modeling and palynological evidence. Glob Ecol Biogeogr 20:272–288

Whittaker RJ, Araújo MB, Paul J, Ladle RJ, Watson JEM, Willis KJ (2005) Conservation biogeography: assessment and prospect. Divers Distrib 11:3–23